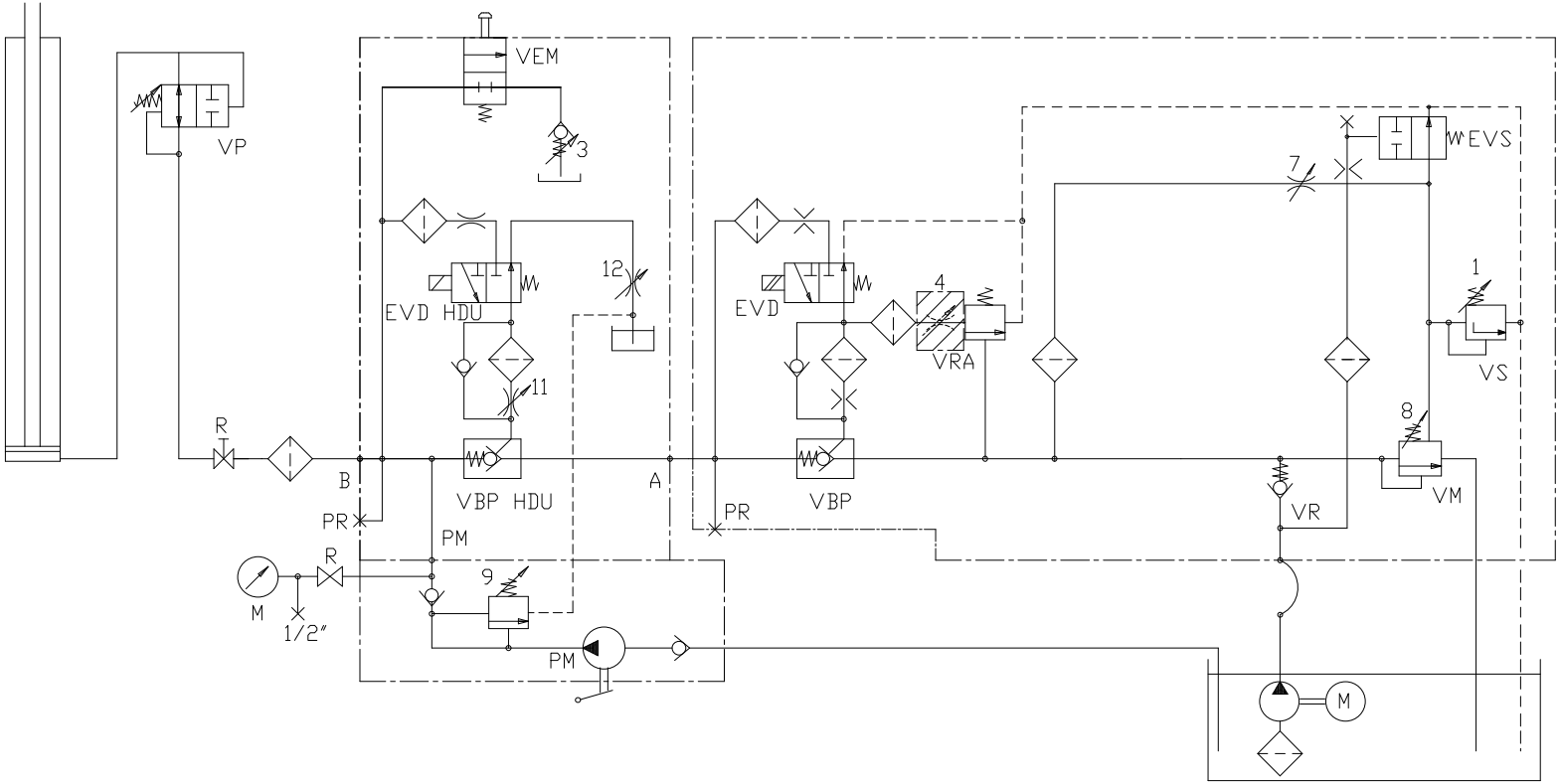SCHEMA IDRAULICO VALVOLA HOMELIFT HC-01 + HDU STAND ALONE - rev.01 12/04/2021
HOMELIFT HC-01 VALVE + HDU STAND ALONE VALVE HYDRAULIC VALVE